MAGNA™
A TEREX BRAND

TECHNICAL SPECIFICATION

MC170
TELESCOPIC CONVEYOR

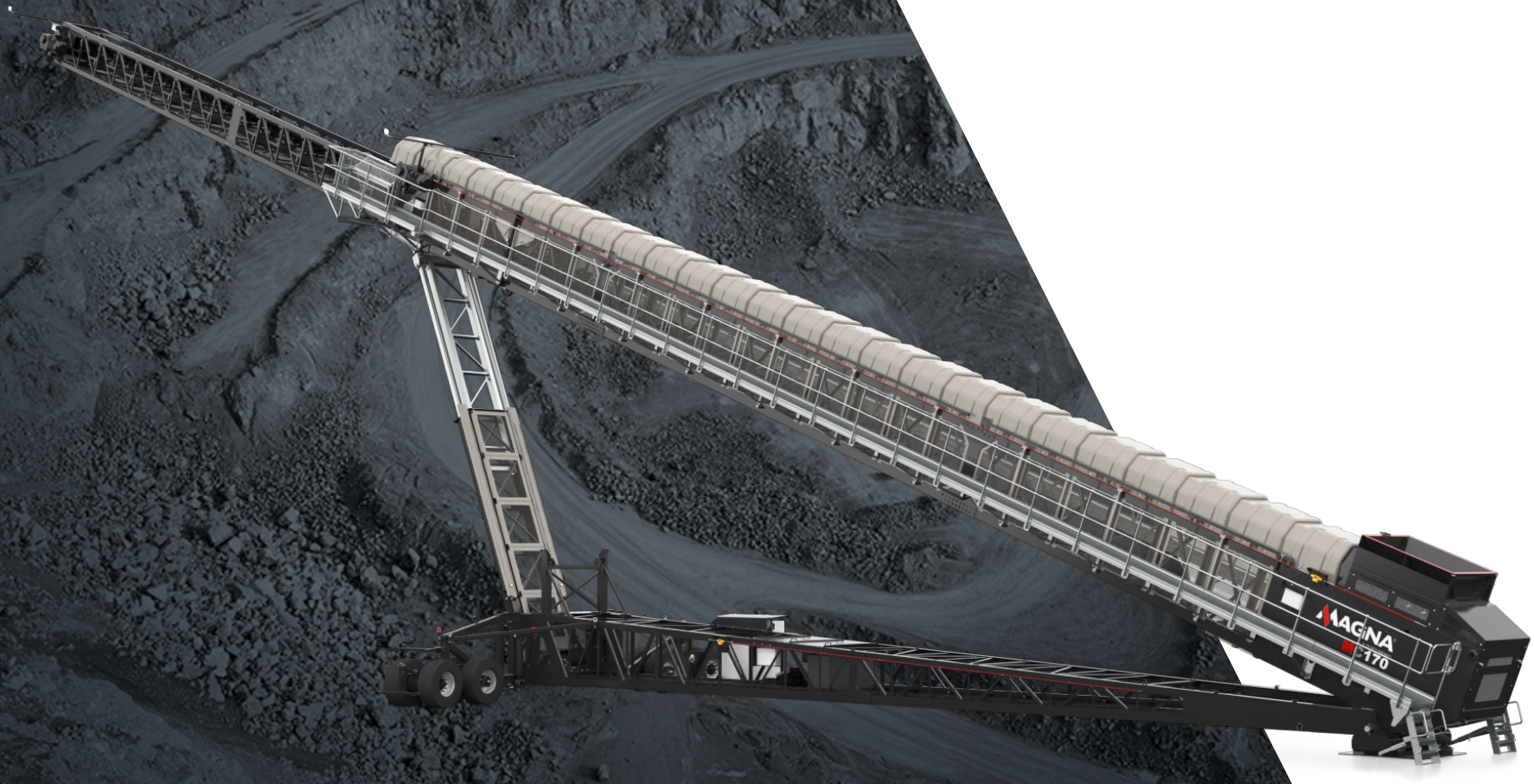

OVERVIEW

Total weight: 56,500kg (124,561lbs)

Chassis

Length: 26.49m (86′ 11″)
Width: 4.87m (15′ 11″)
Height: 3.6m (11′ 9.5″)

Inner & Outer Conveyor

Length: 33.56m (110′ 2″)
Width: 2.6m (8 ‘6″)
Height: 3m (9′ 10″)

(Transportable by 5 x 40ft Containers)

Working:

Drum Minimum Length (Retracted): 32.7m (107′ 3″)

Working Width (Wheels in radial position): 10.1m (33′ 2″)

Minimum Height: 6.5m (21′ 4″)

Minimum working angle: 7°

Drum Maximum Length (Extended): 51.45m (168′ 10″)

Working Width (Wheels in Radial position): 10.1m (33′ 2″)

Maximum Height: 17.65m (58′ 0″)

Maximum working angle: 18°

Maximum Tonnage: Up to 1500 tph

Maximum Feed Size: 150mm (6″)

FEATURES

- Automated Stockpile Patterns - Radial windrow, Inline Windrow, Radial Conical, Inline Conical.
- Feedboot sealed with slider pads as standard for better feedboot sealing.
- Outer conveyor full length underguards and side guards for safety.
- Heavy duty belt tensioner.
- Winch with counter to control position of inner conveyor.
- Hydraulic Discharge Height Adjustment.
- Twin radial wheel drive.

OVERVIEW

Feedboot Dead box (Standard)

Standard Capacity: 1.55m³ (1.4 Cu. Yd.)
Feed In width: 1.64m (5′ 4″)

Impact base and side rollers

Twin Motors with Helical gearbox on inner and outer conveyors

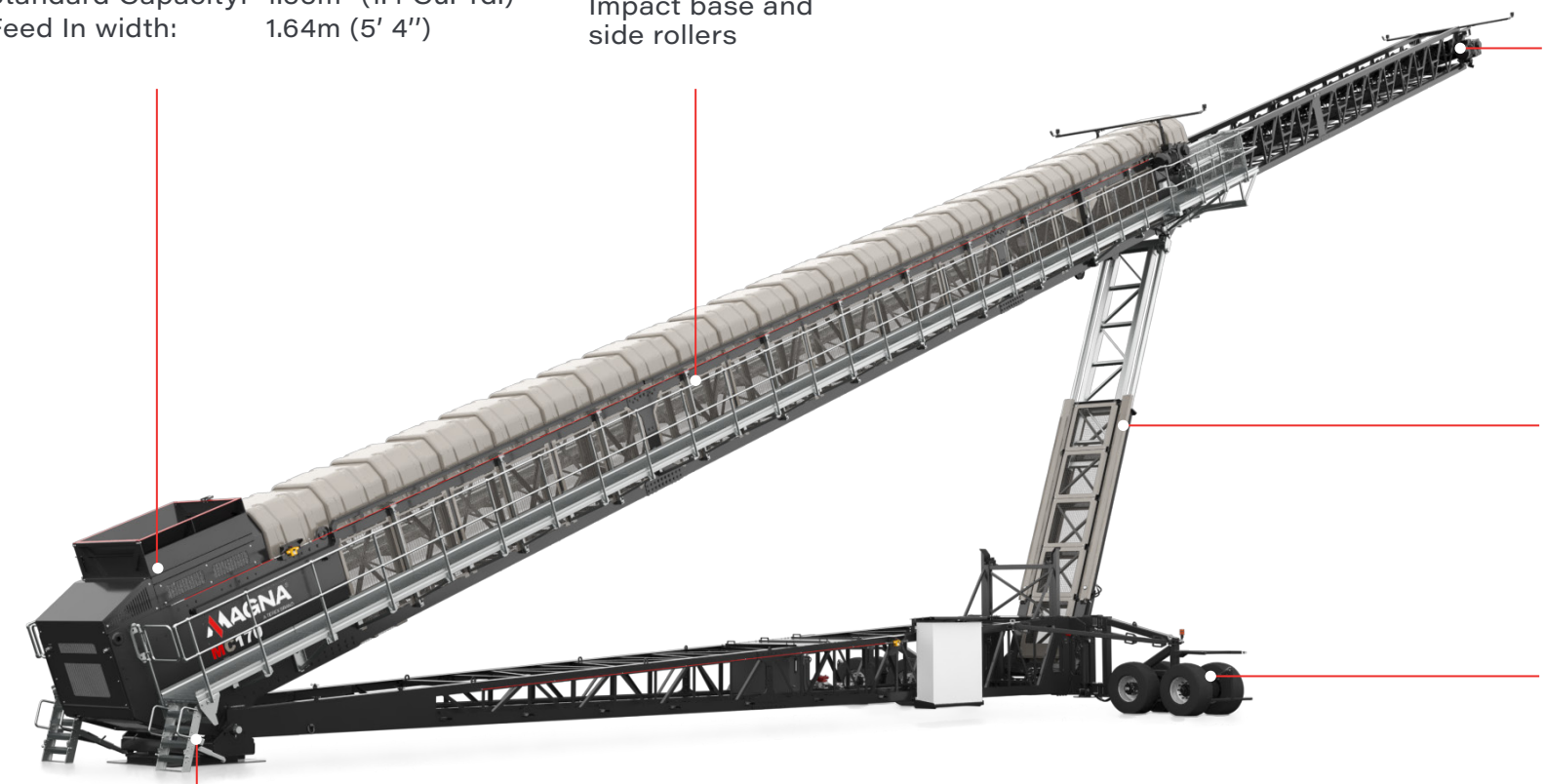

Hydraulic raise/lower radial powered by 30kw Electric motor

Twin radial wheel drive

Pit Chassis - Single axle c/w jacking rams and towing eye

Stockpile Capacity @ 18°@ 270°Radial: 92,397m³ (120,851 Cu.Yd.)

OVERVIEW

INNER CONVEYOR

Width:	1050mm (42″)
Belt Centres:	21.65m (71′)
Belt Type:	Plain
Belt Spec:	EP400 3 4+2
Drive Drum Diameter:	520mm (20″)
Tail Drum Diameter:	457mm (17.9″)

OUTER CONVEYOR

Width:	1050mm (42″)
Belt Centres:	31m (101′9″)
Belt Type:	Plain
Belt Spec:	EP400 3 4+2
Drive Drum Diameter:	520mm (20″)
Tail Drum Diameter:	457mm (17.9″)
Operating Angle:	7 - 18°

OPTIONS

- Pull Cord Emergency Stop
- 6mm Mild Steel feedboot liners
- 6mm AR400 feeboot liners
- 12mm AR400 feedboot liners
- 20mm rubber feedboot liners
- Conveyor Fitted with Heavy Duty Plain Belt EP500/3 Ply x 5+1.5 Covers
- Working lights
- Quad radial drive for high resistance drive application
- Low level grease points for inner conveyor and outer conveyor

DIMENSIONS

WORKING FULLY EXTENDED

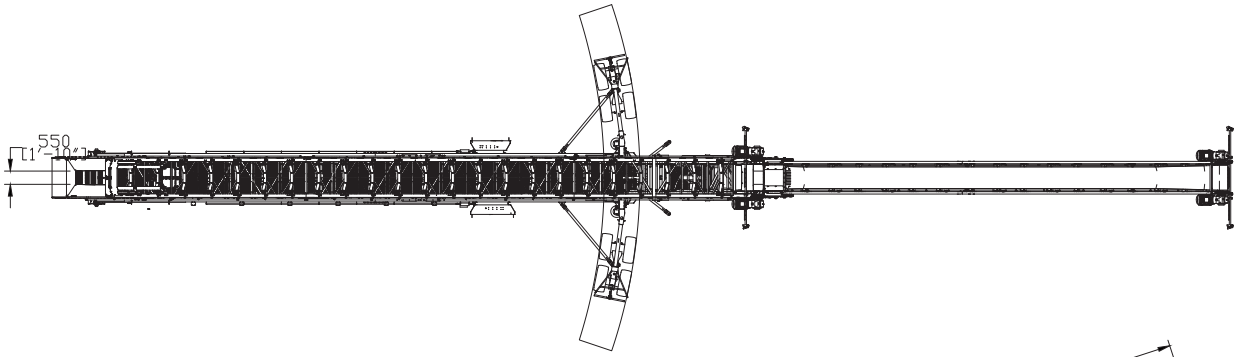

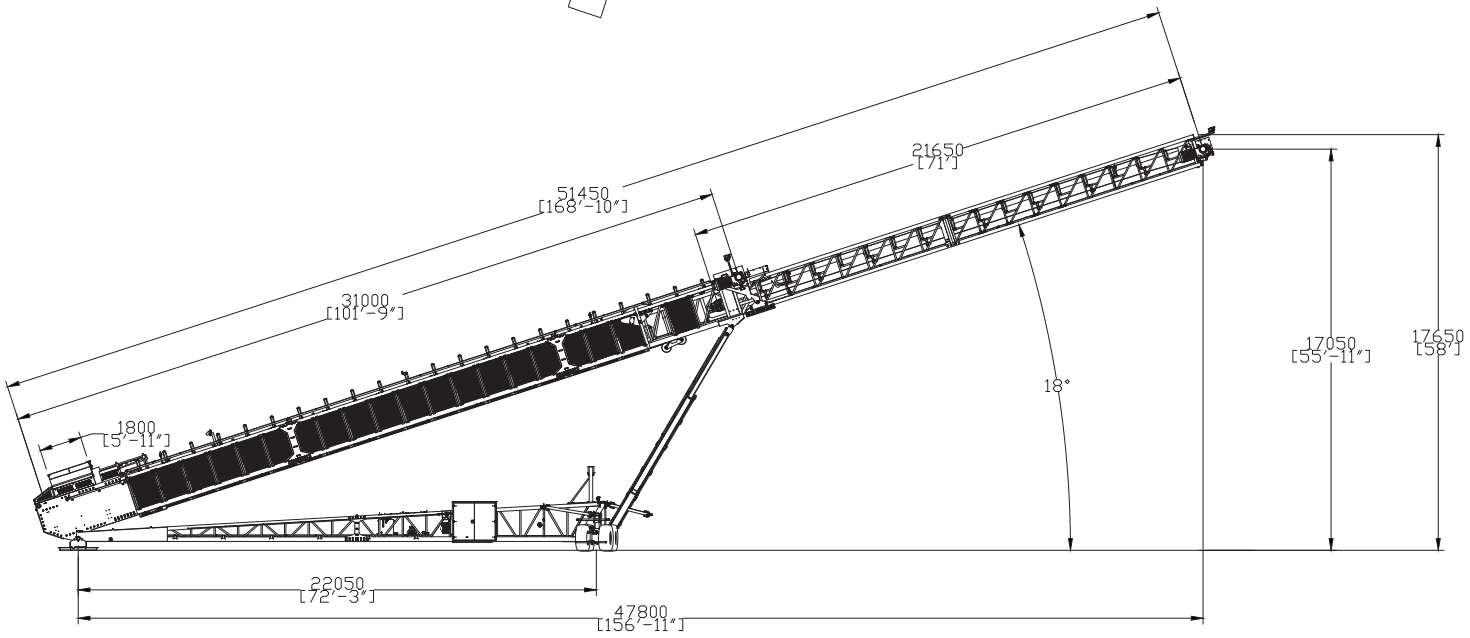

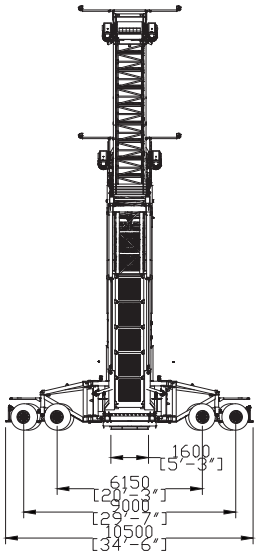

DIMENSIONS

WORKING FULLY RETRACTED

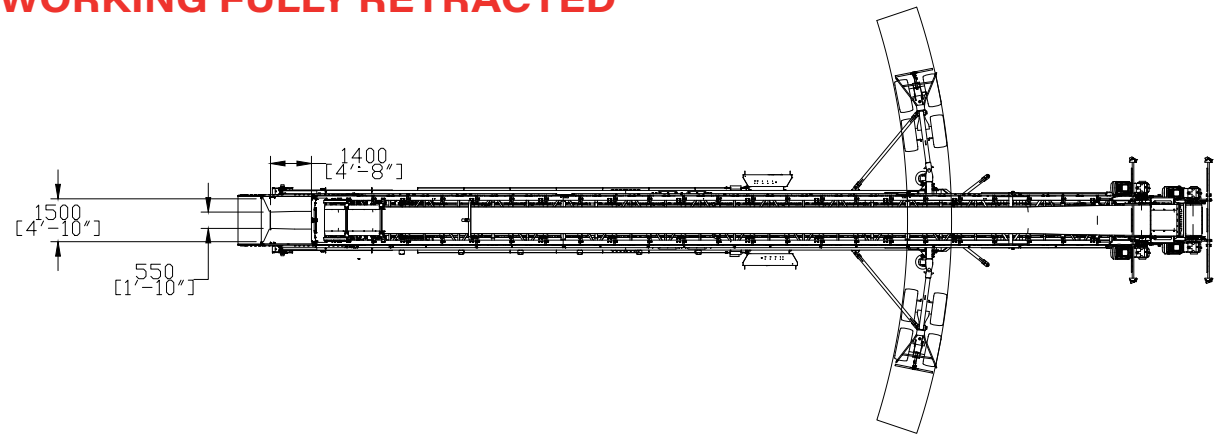

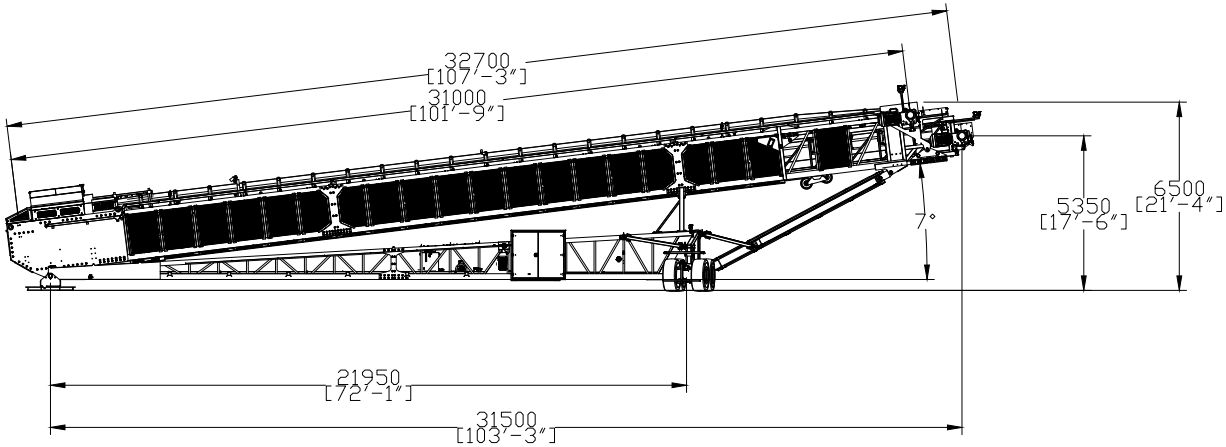

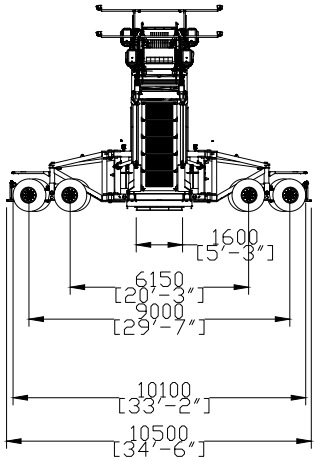

STOCKPILE DIMENSIONS

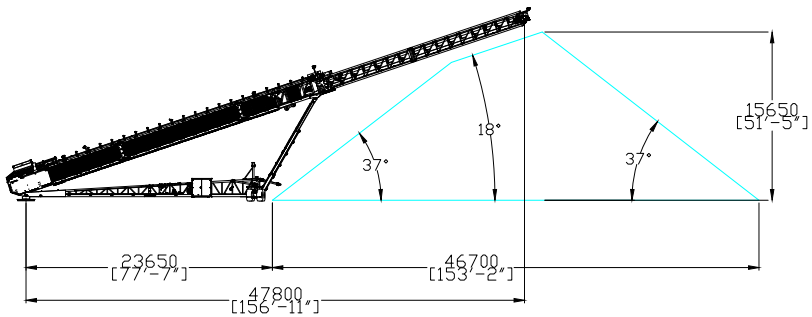

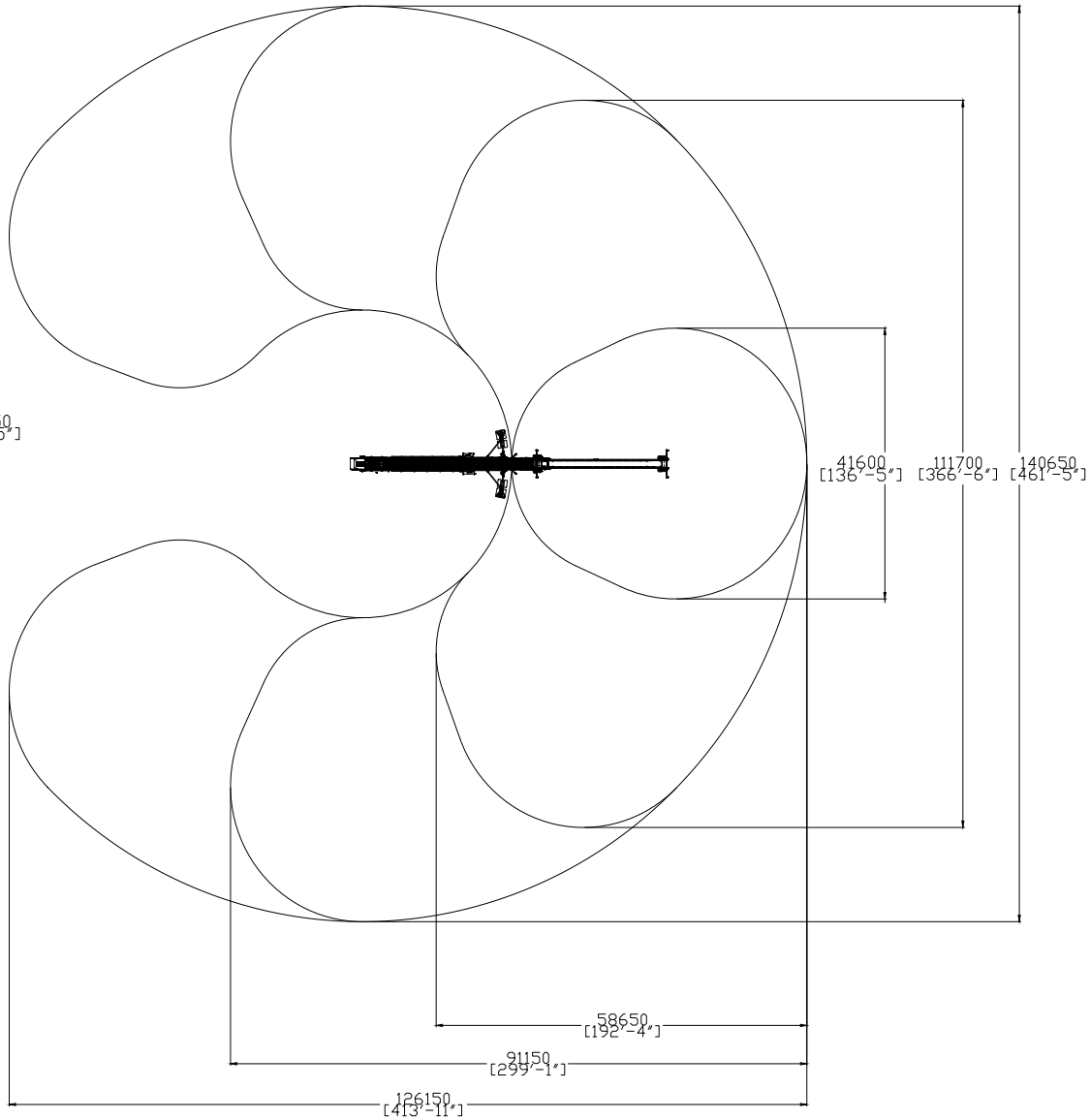

APPROX. STOCKPILE CAPACITY
MATERIAL DENSITY: 1600kg/m3

RADIAL DEG	VOLUME (m3)	VOLUME (yrds3)	MASS (Tonnes)	MASS (Ton)
0	7858	10278	12573	13830
30	17252	22565	27603	30364
60	26645	34850	42632	46895
90	36038	47136	57661	63427
120	45431	59422	72690	79959
150	54825	71708	87720	96492
180	64218	83994	102749	113024
270	92397	120851	147835	162619

MAGNA™

A TEREX BRAND

Omagh, UK
Drumquin Road
Omagh
Co. Tyrone
BT78 5PN

Tel: +44 (0) 28 8241 8700
Email: magna@terex.com

terex.com/magna